Health Canada Santé Canada

Your health and safety… our priority. *Votre santé et votre sécurité… notre priorité.*

Guidance for Designing, Installing, Maintaining and Decommissioning Drinking Water Cisterns in First Nations Communities South of 60°

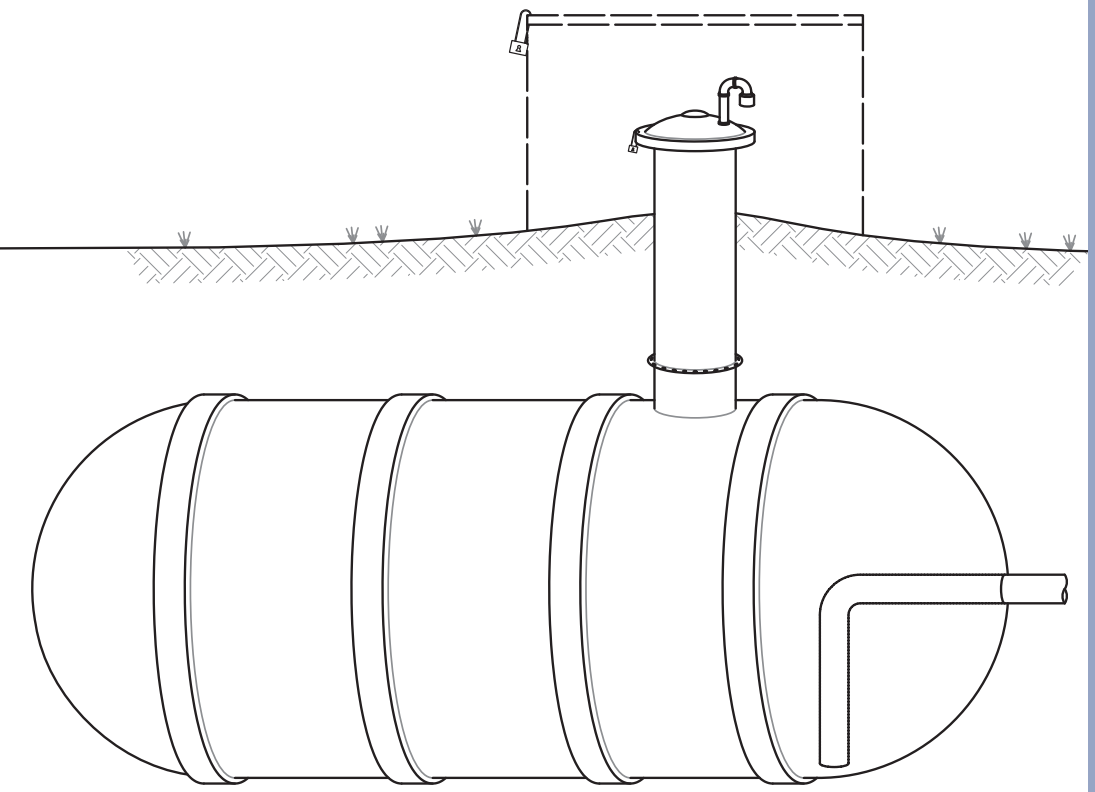

Canada

Health Canada is the federal department responsible for helping the people of Canada maintain and improve their health. *We assess the safety of drugs and many consumer products, help improve the safety of food, and provide information to Canadians to help them make healthy decisions. We provide health services to First Nations people and to Inuit communities. We work with the provinces to ensure our health care system serves the needs of Canadians.*

Published by authority of the Minister of Health.

Également disponible en français sous le titre :
Document d'orientation relatif à la conception, à la mise en place, à l'entretien et à la désaffectation des citernes d'eau potable dans les collectivités des Première nations au sud du 60e parallèle

This publication can be made available on request in a variety of alternative formats.

For further information or to obtain additional copies, please contact:
Publications
Health Canada
Ottawa, Ontario K1A 0K9
Tel.: 613-954-5995
Fax: 613-941-5366
Email: info@hc-sc.gc.ca

HC Pub.: 110160
Cat.: H34-237/2011E
ISBN: 978-1-100-19224-6

Guidance for Designing, Installing, Maintaining and Decommissioning Drinking Water Cisterns in First Nations Communities South of 60°

Health Canada First Nations and Inuit Health Branch

NOTICE TO READERS

Health Canada has created this guidance document to mitigate the potential public health risks that could arise in case trucked water delivery systems and drinking water cisterns are poorly designed, installed, maintained or monitored.

This *Guidance for Designing, Installing, Maintaining and Decommissioning Drinking Water Cisterns in First Nations Communities South of 60°* helps installers, operators and residents plan, construct, install, maintain and decommission drinking water cisterns. It may be helpful to read this document in conjunction with Aboriginal Affairs and Northern Development Canada's *Water and Wastewater Policy and Level of Services Standards; Design Guidelines for First Nations Water Works; and Protocol for Decentralised Water and Wastewater Systems in First Nations Communities.*

Properly operated and maintained truck systems and well-constructed, operated and maintained drinking water cisterns can provide adequate water service to residents of First Nations communities.

The information in this guidance document represents best management practices based on generally accepted concepts of design, installation, operation and maintenance. It reflects a comprehensive review of existing recommended specifications from a variety of sources. It is not intended to restrict processes or the development of equipment. New and updated technology can be used if it is protective of public health. Templates and examples of calculations are included in the appendices as recommended guidelines only.

Terms which may be unfamiliar to readers are bolded on first use and defined in the glossary.

This guidance document will be updated periodically based on new information, best practices and feedback from users and other stakeholders. To suggest updates, please send an email with the heading "Drinking Water Cisterns" to Health Canada at: **ephd-dsep@hc-sc.gc.ca**

ACKNOWLEDGEMENTS

Health Canada's First Nations and Inuit Health Branch (FNIHB) acknowledges ADI Limited for its comprehensive research and assistance in completing this guidance document and to Delcan Corporation for providing the illustrations and helping with revisions.

FNIHB also thanks the following individuals and those working in the organizations listed below for their invaluable contributions to this guidance document:

- FNIHB Regional Environmental Health Managers.
- Health Canada's Healthy Environments and Consumer Safety Branch.
- Aboriginal Affairs and Northern Development Canada.

TABLE OF CONTENTS

FIGURES

APPENDICES

1. Introduction

This document provides guidance from a public health perspective on the best ways to design, install, operate, maintain and decommission **drinking water cisterns**.

It is intended to provide information to all organizations and individuals involved in these activities, including:

- **First Nations authorities,** such as Chief and Council, responsible for supplying **drinking water** to their communities;
- Installers;
- Community-based Drinking Water Quality Monitors (CBWMs) and Environmental Health Officers (EHOs) who carry out microbiological sampling of drinking water in cisterns;
- Water users (home occupants); and
- Cistern manufacturers.

This guidance document can be used when installing new drinking water cisterns, as well as when operating, maintaining and decommissioning new and existing ones.

Drinking water delivered to the cistern must be microbiologically safe. It should only be sourced from the community water treatment plant or another public drinking water system. At minimum, it must meet the requirements of the latest edition of the *Guidelines for Canadian Drinking Water Quality* (GCDWQ), or the applicable regulations of neighbouring jurisdictions if these are more stringent.

The amount of water delivered to each drinking water cistern should ideally match the average amount of water used between deliveries. Most of the water should be used between delivery periods. This practice helps maintain the chlorine residual and reduces the possibility of the drinking water becoming contaminated.

2. Design and Construction of Drinking Water Cisterns

All drinking water cisterns should be specifically designed for drinking water storage, and not other uses (such as septic holding tanks). Ideally, cisterns should be made from durable, corrosion resistant and lightweight materials and be easy to install. They should be designed and constructed so water can be completely drained or pumped out for cistern cleaning and **disinfection**. The interior surface of the cistern should be smooth so no foreign material can stick to it, again making it easy to thoroughly clean and disinfect.

3. Drinking Water Cistern Selection Flow Chart

The following flow chart can be used to help select the best construction material (concrete, polyethylene, fibreglass), location and size for a drinking water cistern. The flow chart also helps you figure out if the drinking water cistern should be installed above or below ground.

Drinking Water Cistern Selection Process Flow Chart

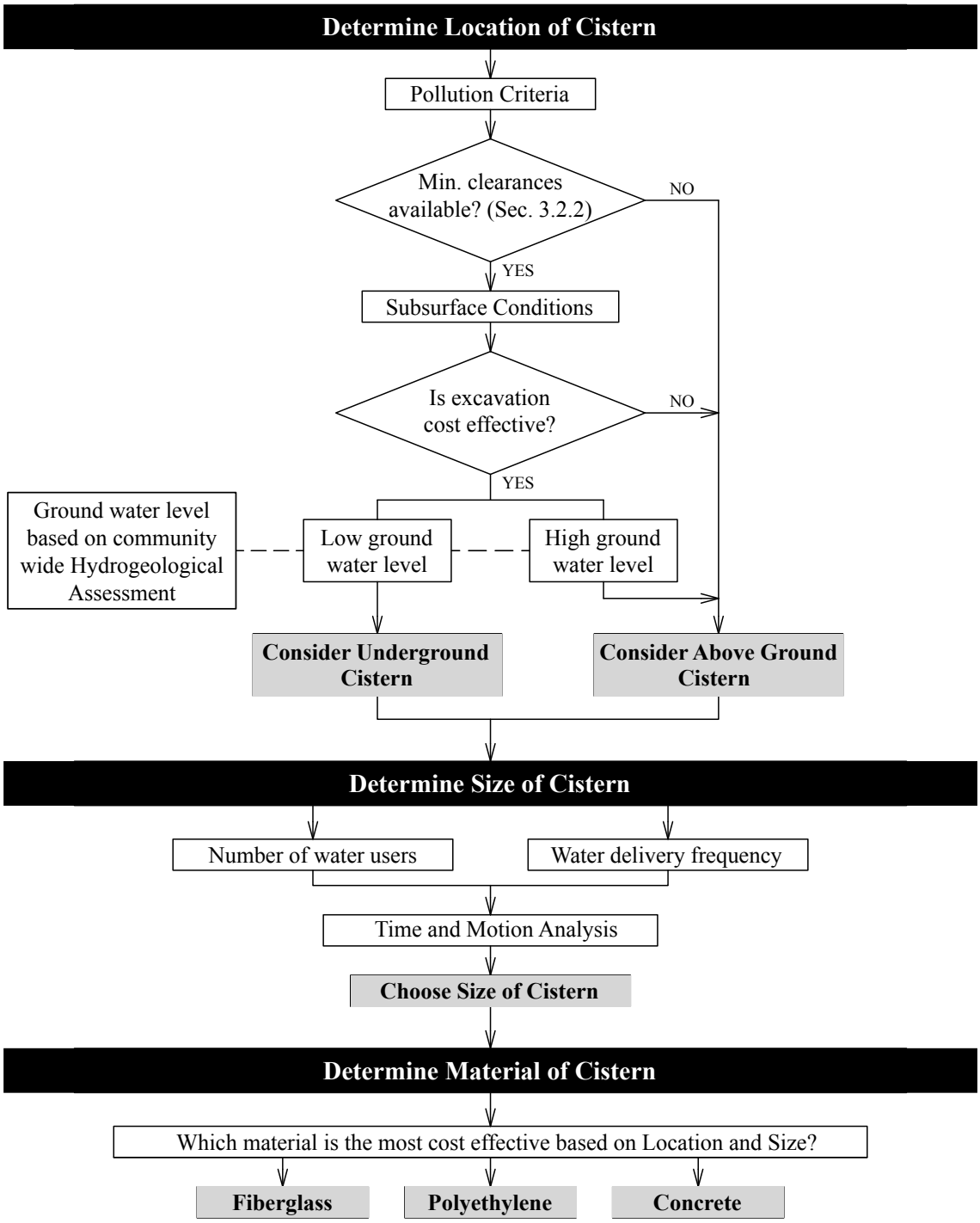

3.1 Drinking Water Cistern Construction Materials

Drinking water cisterns should be made from a material that will not decay, deform or corrode. This material must meet NSF/ANSI Standard 61 for Drinking Water System Components—Health Effects. If a coating is applied to the interior of the cistern, the coating material should also comply with NSF/ANSI Standard 61. If this certification is not available, then the coating material should conform to the requirements outlined in section 5.301.11, Chapter 5, of the US Food and Drug Administration (USFDA) Food Code 2009.

Drinking water cisterns are made from one of three types of materials:

- Fibreglass;
- Polyethylene; and
- Concrete.

3.1.1 Fibreglass Drinking Water Cisterns

The design of fibreglass drinking water cisterns depends on whether the cistern will be installed above or below ground.

Above ground drinking water cisterns may be manufactured in sections that can be assembled inside an existing building or in a shed next to a house or building. In order to prevent water leakage, any joints between the sections in a drinking water cistern should ideally be flanged, installed with gaskets and bolted with materials that comply with NSF/ANSI Standard 61.

Drinking water cisterns that will be installed below ground should be designed and manufactured with built-in reinforcing ribs to withstand the pressure of the soil. The ribs should be on the outside of the drinking water cistern, keeping the interior surface smooth.

Fibreglass drinking water cisterns should be constructed to meet ANSI/AWWA D120-02 Standard for Thermosetting Fibreglass—Reinforced Plastic Tanks. This standard describes the composition, performance requirements, construction practices, workmanship, design and methods for testing fibreglass cisterns for water storage.

See *Figure 1—Fibreglass Drinking Water Cistern* for typical design features of above and below ground fibreglass drinking water cisterns.

Figure 1—Fibreglass Drinking Water Cistern

(Caution: Underground installation of tanks carries risks that must be addressed prior to installation)

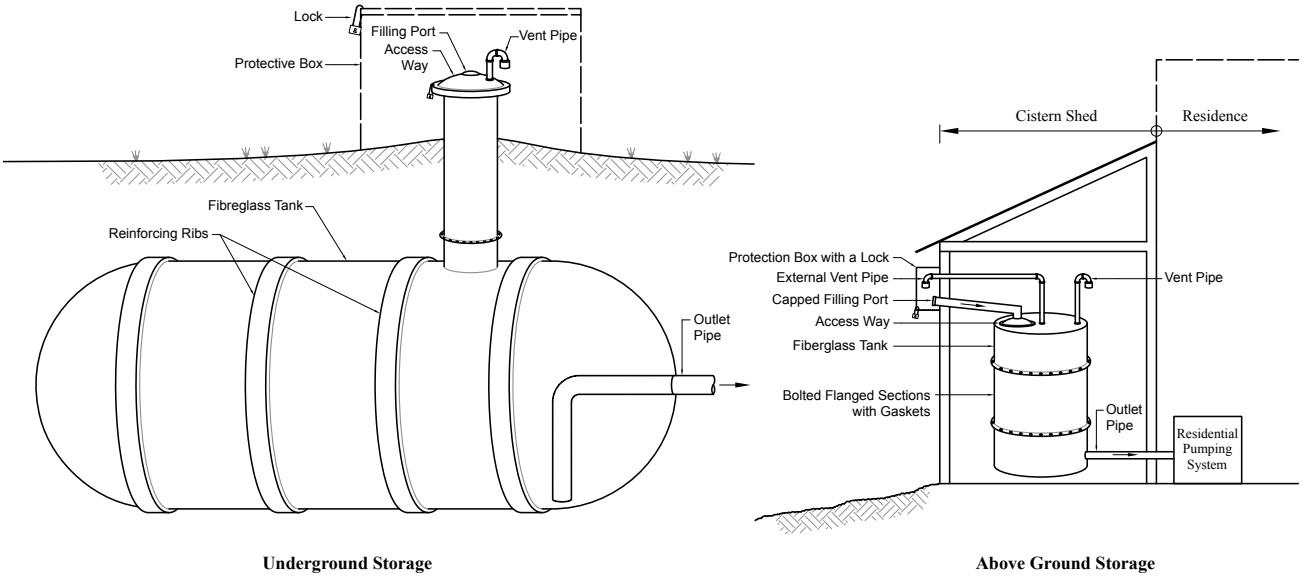

3.1.2 Polyethylene Drinking Water Cisterns

Polyethylene drinking water cisterns are designed as single-piece non-pressure tanks, for both above or below ground installation. They are made from either linear medium-density polyethylene or linear high-density polyethylene (HDPE).

As with fiberglass, polyethylene drinking water cisterns to be installed below ground should be designed with built-in reinforcing ribs. The ribs make it possible for the cistern to withstand the pressure of the soil. The ribs should ideally be on the exterior of the cistern, keeping the interior surface smooth.

Polyethylene drinking water cisterns should be made from resins that comply with USFDA Regulation 21 CFR 177—Indirect Food Additives, or with NSF/ANSI Standard 61.

When drinking water cisterns are installed above ground, they should be placed in a shed or building near the house to protect them from the weather and related conditions, such as damaging ultraviolet light and freezing temperatures.

Refer to *Figure 2—Polyethylene Drinking Water Cistern* for typical design and installation features of above and below ground drinking water cisterns.

Figure 2—Polyethylene Drinking Water Cistern

(Caution: Underground installation of tanks carries risks that must be addressed prior to installation)

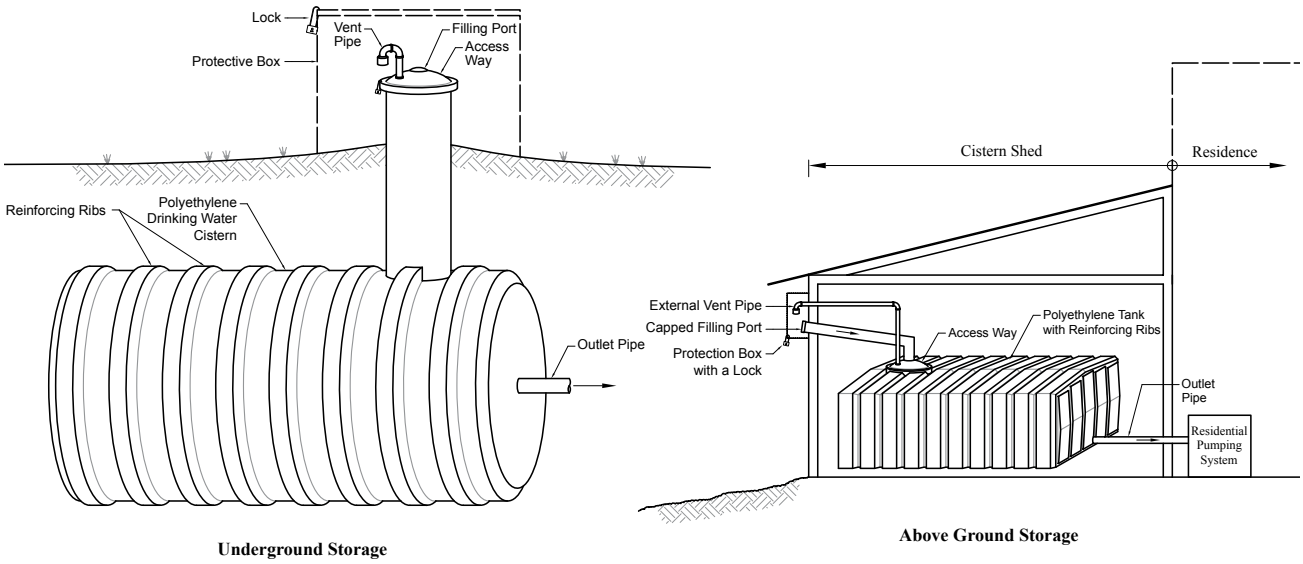

3.1.3 Concrete Drinking Water Cisterns

Concrete drinking water cisterns should be constructed from reinforced concrete and are usually installed below ground. The interior of the cistern should be coated with a waterproof material certified for use in drinking water applications (NSF/ANSI Standard 61).

The interior coating should be applied and cured according to the manufacturer's directions (including the use of specified curing agents). Interior coatings in drinking water cisterns help maintain water quality. They also preserve the concrete that the drinking water cistern is built from, extending the life of the cistern.

If the drinking water cistern is constructed in sections, the joints should be sealed with gaskets.

All the materials used should follow NSF/ANSI Standard 61.

Refer to *Figure 3—Concrete Drinking Water Cistern* for typical design and installation features of concrete drinking water cisterns installed below ground.

Figure 3—Concrete Drinking Water Cistern

(Caution: Underground installation of tanks carries risks that must be addressed prior to installation)

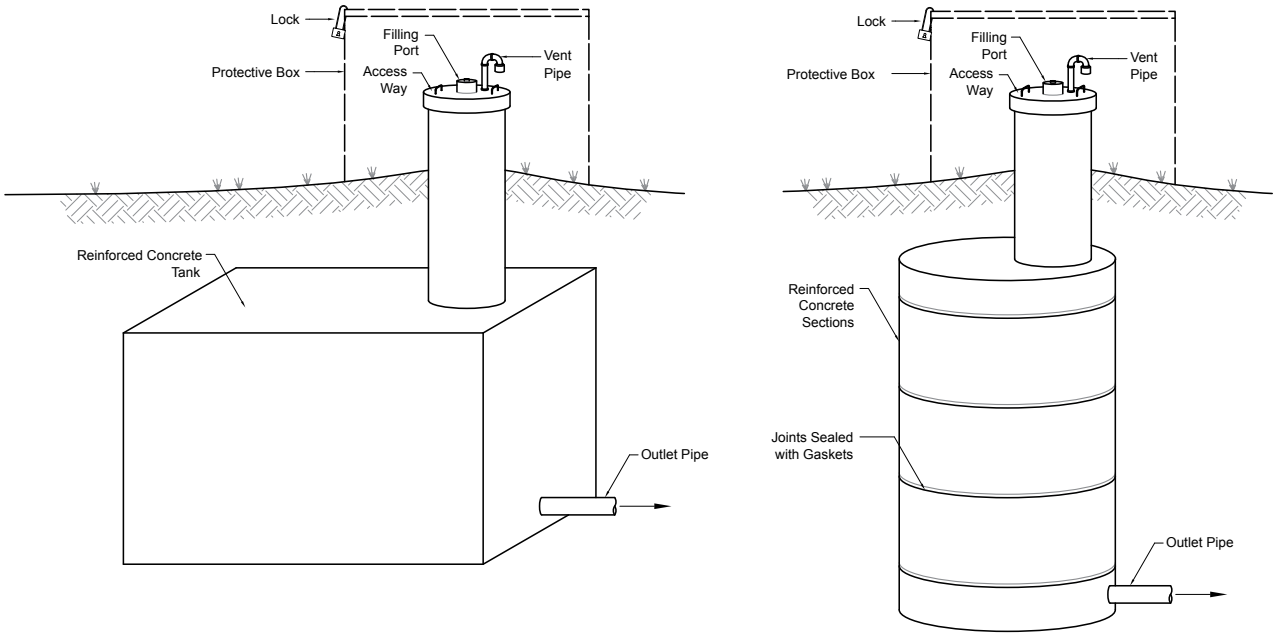

3.2 Drinking Water Cistern Location

Drinking water cisterns should be located:

- In an area accessible for servicing, cleaning and filling;
- Away from potential sources of contamination, including septic tanks, seepage pits, disposal fields, animal manure storage areas and areas subject to flooding; and
- Away from high traffic areas such as driveways in order to protect them from potential damage. Refer to *Figure 8—Impact Protection* for guidance on protecting drinking water cisterns from potential impacts.

3.2.1 Soil Condition and Surface Drainage

When selecting an appropriate location for installing a drinking water cistern, take into account the geological properties of the area (especially the soil type and groundwater elevations) and any future landscaping plans.

The finished landscaping around a drinking water cistern should be sloped (a minimum of 2%) to direct rain and other surface water run-off away from the cistern and to stop water from collecting around it.

3.2.2 Clearances from Potential Sources of Contamination

It's a good practice to make sure drinking water cisterns installed below ground are at least the following distances from potential sources of contamination:

- 3 m from the residence;[1]
- 15 m from any septic tank, sewage holding tank or sewage disposal field;
- 30 m from any cesspool or leaching pit; and
- 50 m from any point of sewage discharge to the surface (or the setbacks specified in applicable provincial regulations).

1. Interdepartmental Water Quality Training Board (IWQTB), *Drinking Water Storage Tanks* (2009).

Before installation, be sure to verify provincial guidelines for minimum clearances for cisterns installed below ground. Provincial health authorities may recommend larger distances.

If these clearances are not achievable, or if there are any possible sources of contamination in the area, consider locating the drinking water cistern inside a shed or building above ground.

The drinking water cistern inlet/fill pipe should be located as far away as possible from any sewage pump-out connections (at least 2 m). The drinking water cistern should be located as far away as possible from any sewage pump-out connection (at least 2 m). **This important practice will prevent any unnecessary contamination when connecting the water delivery hose to the inlet/fill pipe.**

Be sure to clearly identify and permanently label the water cistern inlet/fill pipe connection and the sewage pump-out connection.

Refer to *Figure 4—Surface Contamination Protection* for an illustration of minimum distances between the drinking water cistern inlet/fill pipe and potential sources of contamination.

Figure 4—Surface Contamination Protection

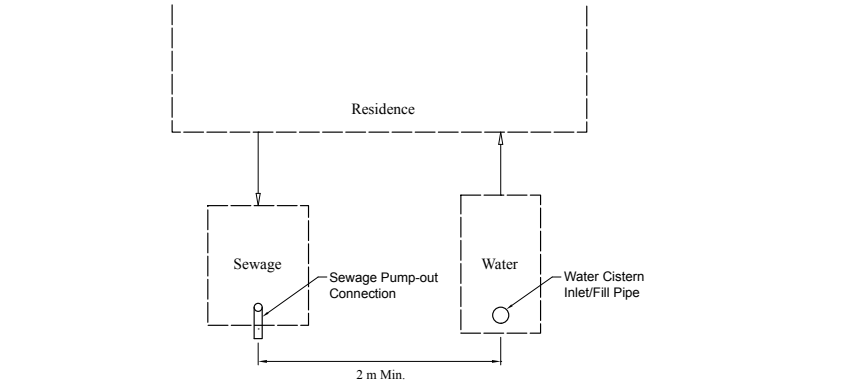

Plan

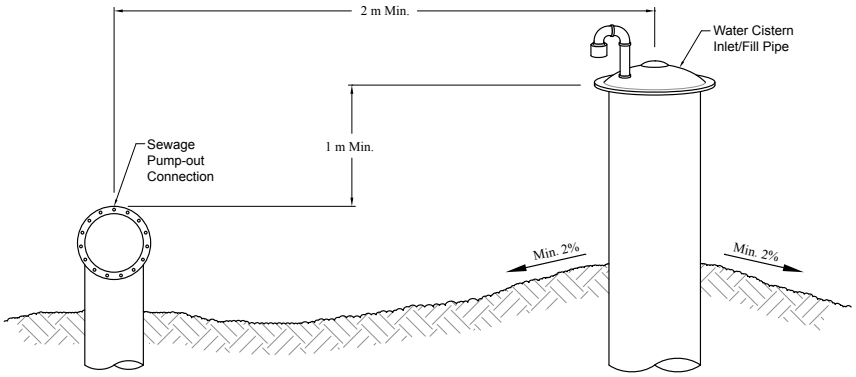

Section

3.3 Drinking Water Cistern Size

The drinking water cistern should hold enough drinking water to supply the entire household for a minimum of one week and a maximum of two weeks.

The ideal storage volume of a drinking water cistern for an individual home depends on:

- The number of occupants in the home;
- The type of plumbing fixtures (for example: low-flow toilets and shower-heads);
- The frequency of water delivery; and
- Additional water consumption factors, such as individual laundry use versus use of a central community laundry facility.

A water quality specialist, such as a water engineer or water technician/installer, can help you determine the size of drinking water cistern required to meet a household's needs.

Fire Protection

Water in drinking water cisterns should not be used for fire protection in public buildings (schools, health centres, libraries).

Drinking water cisterns and water storage cisterns for fire protection must be separate and not connected to each other.

3.4 Storing, Transporting and Handling Drinking Water Cisterns

When storing or transporting a new drinking water cistern, the manufacturer, retailer and/or installer must cover the cistern to prevent contaminants from entering it before installation.

To protect the cistern during transportation and installation, it must be lifted without dragging or dropping. Only appropriate lifting attachments (lugs) should be used to lift or handle the drinking water cistern.

A drinking water cistern that is ready to be installed may be stored on a solid level area clear from rocks and debris. It should be anchored to the ground to prevent it from moving.

The installer (or other technically qualified individual) should inspect each new drinking water cistern immediately upon receipt. The drinking water cistern could also be inspected by an individual experienced in installing wells and plumbing. Minor dents and scratches on the cistern may be okay. However, if any damage affects the integrity and/or performance of the drinking water cistern, it should not be installed. Contact the supplier to report the damage.

4. Installing Drinking Water Cisterns

Before installing the drinking water cistern, get copies of the manufacturer's drawings and specifications for the specific cistern. This information will generally tell you the drinking water cistern's dimensions, wall thickness, opening sizes, weight (full and empty), maximum internal pressure rating, structural reinforcements, fabrication material and the maximum depth for burying. Specifications usually provide complete installation and maintenance instructions.

To install cisterns in unstable soils, or where the slopes on the sides of the excavated hole are steeper than 1:1, call on a professional engineer trained in soil science for technical advice about trench and installation safety.

Examples of **unstable soils** include, but are not limited to, sand and water-saturated soil.

The documentation should show that the materials used to fabricate the cistern are certified as being safe for storing drinking water and meet NSF/ANSI Standard 61.

Before installing the drinking water cistern, follow the manufacturer's instructions for **hydrostatically testing** the cistern for leaks.

The installer should then follow the manufacturer's written instructions to install the drinking water cistern. This practice ensures the cistern functions as designed and that all applicable manufacturer warranties and guarantees remain valid.

4.1 Installing Drinking Water Cisterns Below Ground

Before installing the cistern, confirm how deep the hole will need to be in order for enough fill to go on top of the cistern to protect it from freezing conditions.

The hole will also need to be large enough to allow for the manufacturer's recommended minimum distance between the cistern and the excavation walls. This space is needed for bedding and backfill material.

- Bedding and backfill material may be pea gravel (natural, rounded aggregate with particle sizes between 4 mm and 20 mm) or stone or gravel crushing (angular particle sizes between 4 mm and 12 mm). It should not contain any foreign material such as rocks, bricks, clay, wood or material that was dug out to create the hole for the cistern (native material). No sharp objects or large angular stones should come into contact with the cistern at any time;
- The bedding **below the cistern** should be at least 300 mm of compacted material;
- The backfill **around the cistern** should be made of uniform compacted layers no greater than 300 mm deep. Ideally, the cistern would be filled with water at the same rate as the backfill material is loaded in to maintain equal pressure inside and outside the cistern;
- **If the cistern has external ribs** (corrugated), all spaces between the cistern's ribs and under the cistern must be filled completely; and
- **The space above the top layer of backfill** on the drinking water cistern can be filled with on-site material. This material should slope away from the drinking water cistern's inlet/fill pipe (minimum slope of 2%) to ensure appropriate surface water drainage away from the pipe and the installed drinking water cistern.

In locations where the water table is high:

You may need to anchor down the cistern using a ballast. The ballast should be installed according to the cistern manufacturer's recommendations.

Use clean pea gravel or other specified clean granular material to help drain water away from the cistern and to prevent possible frost heave.

A hydrogeologist should complete a community hydrogeological assessment and make recommendations related to installing a drinking water cistern below ground.

The appropriate level of compaction depends on existing soil conditions, the type of backfill and the type of drinking water cistern. Talk with a professional geotechnical engineer or other qualified professional to figure out site-specific details about backfill, type of bedding, grade and anchorage.

Cistern collars should be installed in a way that prevents damage to the cement seals. The grooves between the collars must be properly sealed to prevent contaminants from entering through the joints. The sealant must be made of NSF/ANSI Standard 61-approved material.

If the drinking water cistern is delivered in sections, the joints between the sections should be flanged, installed with gaskets and bolted with materials that comply with NSF/ANSI Standard 61 in order to prevent leakage. Follow the manufacturer's assembly and installation instructions.

See *Figure 5—Below Ground (Buried) Installation—Excavation/Backfill Details* for typical excavation and backfill requirements for installing a drinking water cistern below ground.

Figure 5—Below Ground (Buried) Installation—Excavation/Backfill Details

(Caution: Underground installation of tanks carries risks that must be addressed prior to installation)

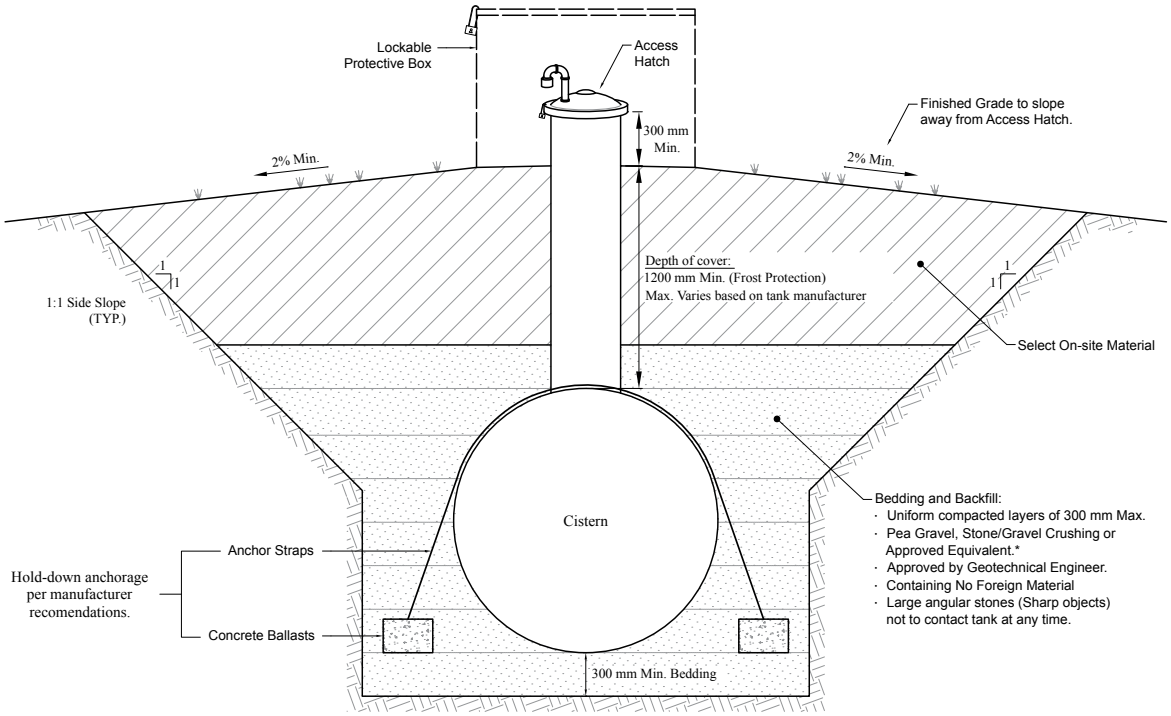

* Approved equivalent refers to an alternative bedding material which is approved by the regulative authority to meet required quality and performance standards.

4.2 Installing Drinking Water Cisterns Above Ground

The best place to install an above ground drinking water cistern is inside a dedicated, heated and insulated cistern shed. The cistern should be installed on a level, crushed rock or concrete pad that has sufficient structural strength to support the drinking water cistern when it is full of water. As a general rule, every 1000 gallons of water inside a cistern adds about 8000 pounds of weight on the foundation/floor. Cisterns should not be installed on wood floors since condensation on the cistern will cause the wood to rot and mould.

The appropriate level of ground compaction depends on existing soil conditions and the type and size of drinking water cistern. The cistern may be anchored to prevent it from moving.

4.2.1 Permafrost Installation

In cold climates with permafrost conditions, drinking water cisterns should be installed above ground inside a dedicated, heated shed or in a dedicated room in the house. A drinking water cistern installed in a house should be in an area where it won't freeze, but also away from any furnace or other direct source of heat.

The drinking water cistern's inlet/fill pipe should be clearly labelled or identified. The pipe should reach outside the building so the drinking water hauler can access it easily. The overflow pipe should be directed to a drain in the floor drain to prevent flooding.

If the drinking water cistern is installed in a dedicated shed outside the house, the shed would ideally be:

- Locked, to make it vandal-proof and inaccessible to the public;
- Used only for housing the water cistern and associated equipment. It should not be used for general storage or for housing animals, for example;
- Constructed with a foundation/floor strong enough to bear the weight of the cistern when it is full of water;

- Insulated and weather-tight to make sure rain and/or snow cannot enter;
- Heated to prevent the water in the cistern and associated piping from freezing;
- Rodent and insect proof; and
- Built at the top of a sloped surface so rain and other water drains away from the shed and the house.

Refer to *Figure 6—Drinking Water Cistern Shed Detail* for a diagram of a typical drinking water cistern shed.

Figure 6—Drinking Water Cistern Shed Detail

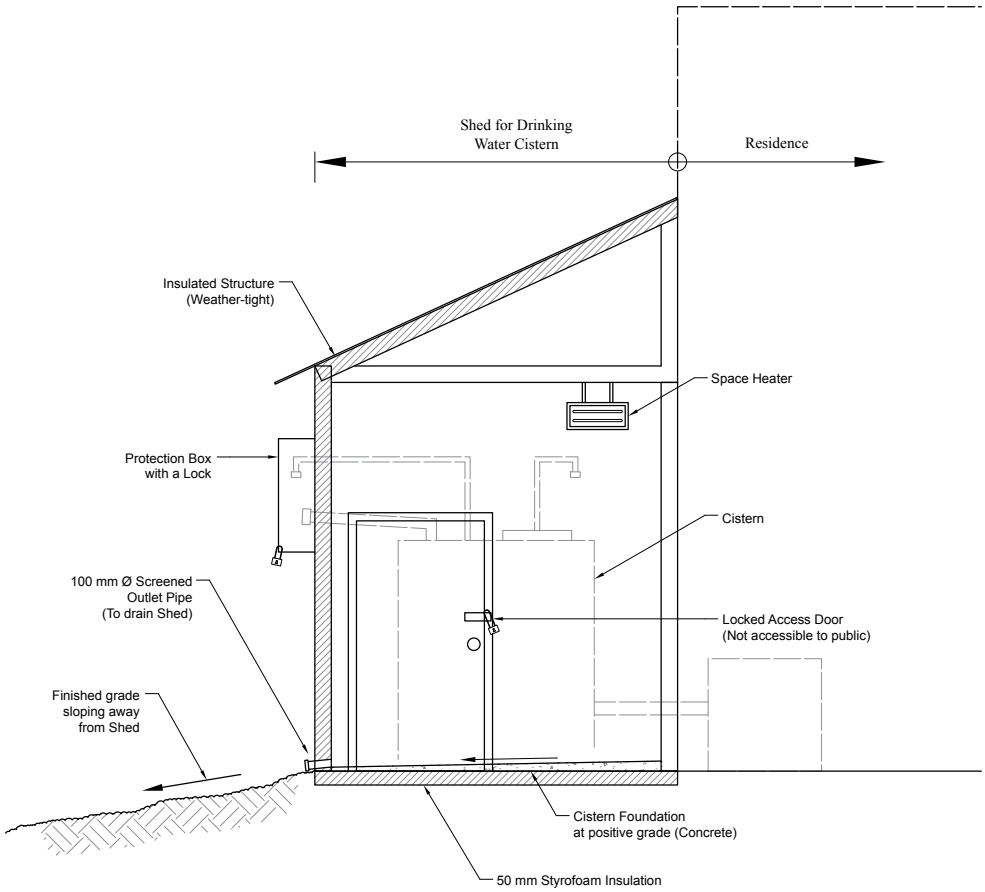

4.3 Access Hatch

Drinking water cisterns must be equipped with an access hatch to allow the cistern to be inspected and cleaned. Ideally, the access hatch should be:

- At least 760 mm wide (Agriculture and Agri-Food Canada, 2006); and
- Equipped with a lockable child-proof hatch cover.

The access hatch opening should have a raised watertight lip around the edge at least 50 mm high. When closed, the cover should form a watertight seal against the access hatch lip. Keep the cover closed at all times except when inspecting, cleaning and disinfecting the cistern.

Concrete drinking water cistern lids without separate filling ports can be difficult to operate. They are more likely to be placed on the ground or dragged across the opening of the cistern when they are removed, making them more difficult to put back in place. The lids should therefore be locked to ensure fill ports are used for regular water deliveries.

Drinking water cisterns installed below ground require watertight and rodent-proof access hatch extensions. Extensions should be sealed between the top of the cistern and the access hatch cover. Locate the access hatch cover at least 300 mm above the finish grade.

See *Figure 7—Access Hatch Detail* for typical installation details for an access hatch.

Figure 7—Access Hatch Detail

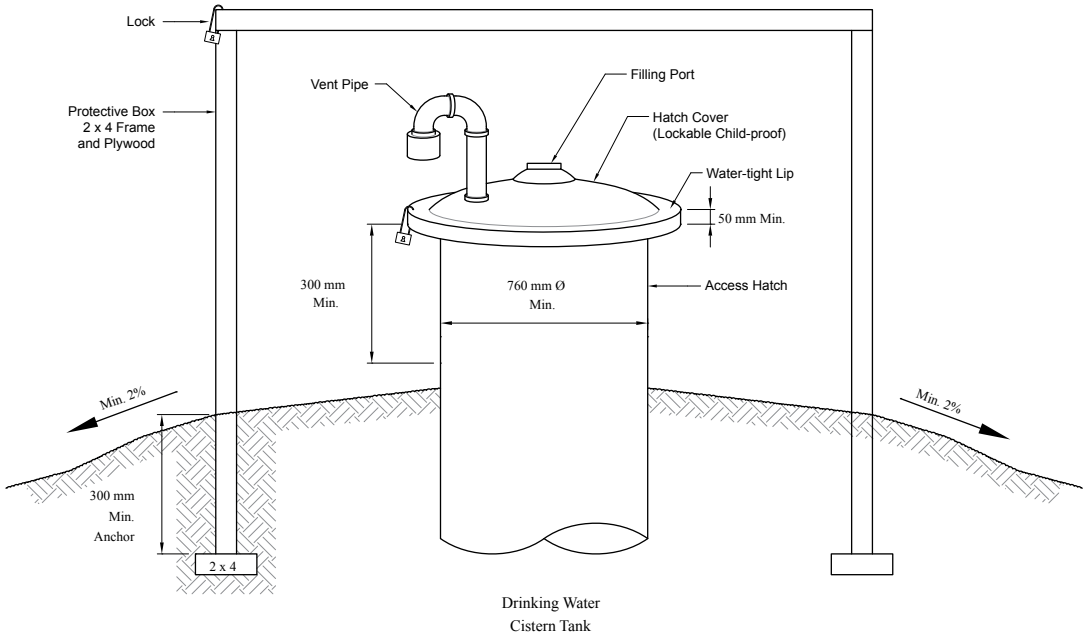

4.4 Impact Protection

Once installed, the water cistern should be protected from potential damage from vehicles, such as the water delivery truck, that might bump or back into it. The drinking water cistern can be protected by installing bollards (steel pipes or posts filled with concrete) or concrete barricades around each corner of the drinking water cistern installed below ground. Other approved methods of protection may also be used.

Figure 8—Impact Protection illustrates a typical configuration for steel bollards to protect drinking water cisterns installed below ground.

Figure 8—Impact Protection

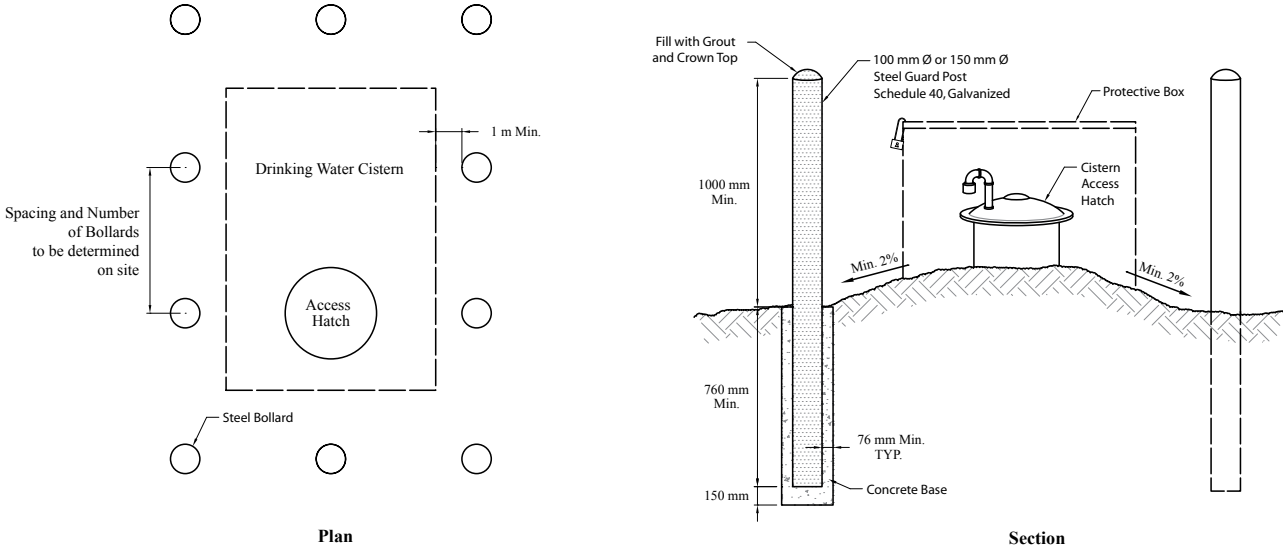

5. Connecting Water Cistern Piping and Drainage

Drinking water cisterns must be properly installed and connected. Plumbing (piping, valves and equipment) that is part of the water storage system should be installed to meet the requirements of the National Plumbing Code of Canada and local plumbing by-laws. The water storage system includes inlet/fill pipes, overflow pipes, vent pipes, drain pipes and building supply pipes.

The water inlet pipe and any others (such as the oil supply pipe and sewage pipes) should be clearly identified to avoid contamination or cross connections with the drinking water in the cistern. One strategy is to colour code the pipes (paint drinking water pipes blue); another is to clearly label all drinking water connections.

5.1 Inlet/Fill Pipe

The inlet/fill pipe located outside the shed should be:

- Constructed of Schedule 80 PVC pipe (a standard PVC pipe available from plumbing suppliers). It should have a minimum inside diameter of 75 mm (or be sized to match the **tanker truck** discharge pipe). It must be intended for drinking water and should be equipped with a tight-fitting, self-closing cap;
- Sloped (to a minimum of 2%) to drain water back to the cistern;
- Located at least 450 mm above the ground, or above the height of the maximum expected snowfall, whichever is greatest; and
- Certified as meeting CSA Standard B137 Thermoplastic pressure piping compendium (for drinking water purposes).

The fitting (nozzle) on the inlet/fill pipe should match the fitting on the water truck delivery hose. The preferred connection is a **cam-lock** fitting that is capped and locked when not in use. The inlet/fill pipe assembly should be watertight from the hose connection all the way through to the connection to the cistern.

5.2 Vent Pipe

The drinking water cistern vent pipe should be:

- Constructed of Schedule 80 PVC pipe with a minimum inside diameter of 50 mm to allow free air flow in and out of the cistern as the water level changes;
- Turned downward and screened to keep out insects and small animals; and
- Equipped with a whistle that sounds when the tank is nearly full.

The end of the vent piping should be located at least 150 mm above the end of the inlet/fill pipe to allow free access for filling the cistern.

If the drinking water cistern is installed inside a building or shed, the primary vent pipe should end outside the building and a secondary vent pipe should be installed with its end inside the building. Two vents are required to prevent chlorine gas build-up and to make it easier to fill the cistern. The end of the interior vent pipe should be screened and directed towards a floor drain or spillage container.

5.3 Drainage

The drinking water cistern should be designed so it can be drained completely for cleaning, disinfecting and flushing. Above ground drinking water cisterns may be equipped with a drain on the underside of the cistern to allow full draining. The drain should be placed at the lowest point in the cistern and connected to the floor drain or to some other water-disposal feature.

If the drinking water cistern is installed below ground, an alternative method for draining the water is advised, such as by using a pump or hand bailing. If a pump is used, the pump suction pipe may extend to within 25 mm of the bottom of the drinking water cistern. All equipment should be cleaned and disinfected per section 7.1 of this document.

5.4 House Connections to the Drinking Water Cistern

Underground piping from the drinking water cistern to the house should either be installed at a depth that protects the pipe from freezing or be insulated with rigid polystyrene foam above the pipe. Rigid polystyrene foam insulation is typically 75 mm thick. Alternative ways of protecting against freezing, such as **heat tracing**, may be used.

For above ground drinking water cisterns, the pump suction piping connection should be located 72 mm above the floor of the drinking water cistern. The connection should consist of a strainer assembly and a manual shut-off valve.

See *Figure 9—Above Ground Drinking Water Cistern Detail* for a typical above ground drinking water cistern installation, including piping and level indicator details.

While it does provide freeze protection, **installing a drinking water cistern inside a house poses a number of concerns**. The advantages and disadvantages need to be considered carefully.

Some of the risks include: potential damage from leaks; poor access for cleaning, maintenance and replacement; and the potential impact of warm temperatures on water quality.

Do not install drinking water cisterns in crawlspaces within a house.

Figure 9—Above Ground Drinking Water Cistern Detail

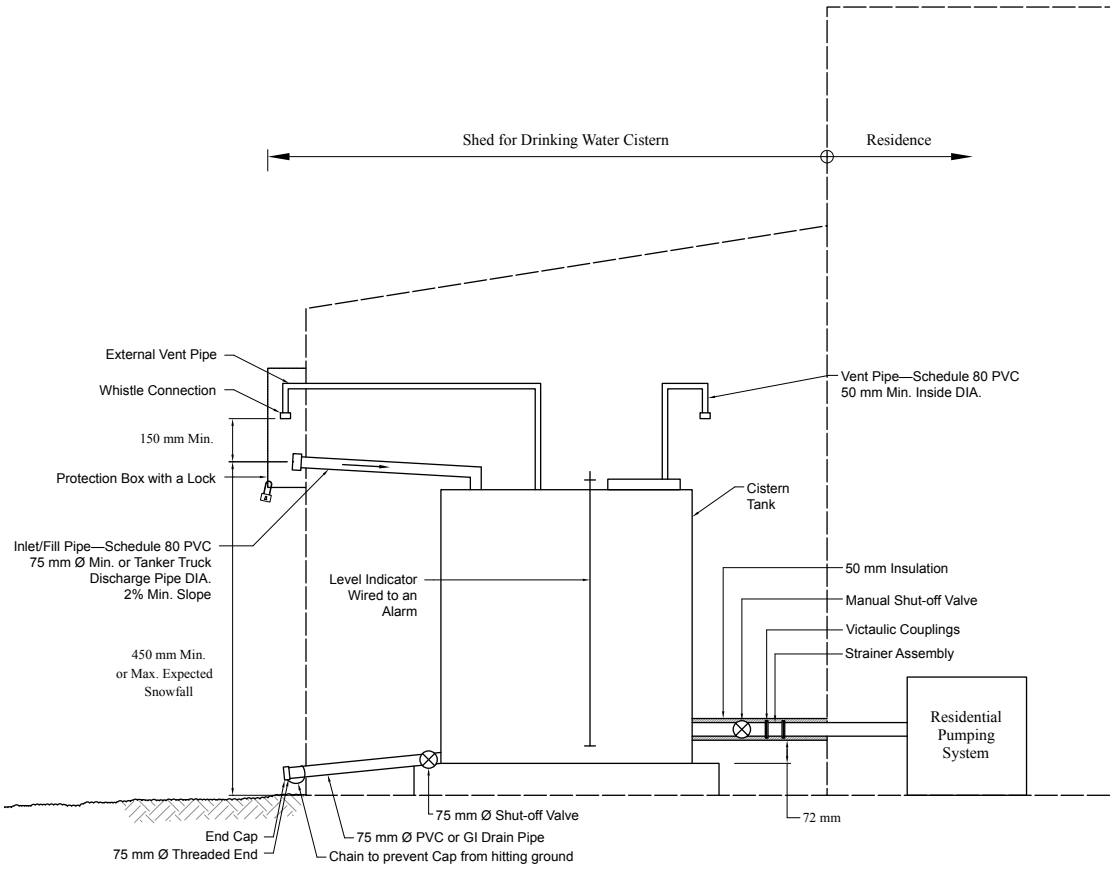

5.5 Level Indicators

Drinking water cisterns may be equipped with high and low level indicators installed by a licensed electrician. The level indicators could be wired to an alarm. The low level indicator could also be wired to the controls for the residential water pump to prevent the pump from operating when the cistern is empty (pumps can be damaged if they are operated without water).

A float gauge or other appropriate level indicating device is also recommended (see NSF/ANSI Standard 61).

6. Preparing and Testing Drinking Water Cisterns Before Initial Use

After installing the cistern, but before use, the installer should clean and disinfect the drinking water cistern. Guidelines for cleaning and disinfecting drinking water cisterns are found in Section 7.1 of this document.

After cleaning and disinfection, a qualified person should test the drinking water in the cistern for bacteriological quality.

7. Maintenance

All equipment that may come in contact with drinking water (including pipes and valves) should be maintained in a clean and sanitary condition. The equipment should be operated in a way that prevents possible drinking water contamination, as well as any possible cross-connections between the drinking water system and any non-drinking water systems (such as grey water or sewage).

If the sanitary condition of the drinking water cistern system is known or suspected to have been compromised, the drinking water should be tested for bacteriological contamination.

If the water is contaminated, home occupants should immediately be advised to boil their water. The drinking water system should then be inspected, repaired, cleaned and disinfected to the extent necessary to correct the situation.

A sample drinking water cistern maintenance record form is provided in Appendix A.

7.1 Cleaning and Disinfection

Inspect, clean and disinfect the drinking water cistern and system after installation and then at least once per year. This practice will reduce the risk of bacterial contamination and help maintain the chlorine residual of the delivered water.

The drinking water cistern should be cleaned and disinfected by someone who has been specifically trained in the following procedures and who has the equipment needed to perform this work safely. **Home occupants should not clean their own drinking water cistern unless they have the necessary training and equipment.**

CAUTION

Hazardous gases and/or low oxygen levels may be present inside a drinking water cistern. The drinking water cistern is considered a "confined space". Only individuals trained in "confined space entry" are allowed to enter the cistern, as per the Occupational Health and Safety requirements of the *Canada Labour Code.*

7.1.1 Cleaning Procedure

The following cleaning procedure is recommended as part of regular maintenance:

1. Drain the drinking water cistern completely. Do NOT use a sewage hauler to pump out the drinking water cistern.
2. Wash all internal surfaces. Scrub them with brushes and non-corrosive food-grade detergents or use a pressure washer that uses a cleaning solution or high water pressure to remove all dirt from the interior of the drinking water cistern.
3. Examine all seals, surfaces and the floor for signs of infiltration, contamination, cracks and leaks.
4. Rinse the interior of the drinking water cistern with drinking water to remove the remaining dirt, debris and detergent residue.
5. Discard all rinse water from the interior of the drinking water cistern.
6. Disinfect the interior of the drinking water cistern, following the steps outlined below.

Individuals involved in cleaning and disinfecting a drinking water cistern must wear clean clothes and boots so they do not contaminate the inside of the drinking water cistern.

7.1.2 Disinfection Procedure

The following disinfection procedure is recommended:

1. Disconnect or disengage all water treatment equipment such as water filters and softeners from the drinking water cistern.
2. Add 400 ml of unscented household bleach (5.25% sodium hypochlorite) into the drinking water cistern for every 1000 L of water cistern volume (IWQTB, 2009). Alternatively, add 200 ml of industrial strength sodium hypochlorite (12%) into the water cistern for each 1000 L of water cistern volume.
3. Fill the drinking water cistern to its maximum holding capacity with drinking water. Once the resulting chlorine concentration of the water solution is at least 15 mg/L, the water is considered heavily chlorinated water. Water tests should be performed by qualified personnel who have the appropriate testing kits for measuring chlorine concentrations of at least 15 mg/L.
4. Disinfect the associated piping and equipment by pumping the heavily chlorinated water into the domestic plumbing pipe and then opening each faucet and running the water until you can smell the chlorine (MDEQ, 2002).
5. Leave the chlorinated water in the cistern and in the associated piping and equipment for a minimum of 24 hours to allow adequate time for disinfection. **Water MUST NOT BE CONSUMED during this process,** as it will contain high levels of chlorine that are unsafe for consumption. This water should not be used for laundry or bathing. An alternative supply of drinking water, such as bottled water, should be used during this period.
6. After disinfection, drain the chlorinated water from the cistern and associated piping and equipment, and thoroughly rinse the system with drinking water (NSEL, 2005).
7. Dispose of the heavily chlorinated water and rinse water in accordance with the procedures outlined in Section 7.2.
8. The drinking water used to refill the drinking water cistern should pass tests for bacteriological safety before the cistern is used again.

7.2 Disposing of Heavily Chlorinated Water

CAUTION

Only suitably trained personnel are allowed to dispose of heavily chlorinated water. Handling and use of these chemicals is extremely dangerous.

The heavily chlorinated water from drinking water cistern disinfection and the rinse water should be disposed of in a way that does not harm the environment. Disposal should comply with the Department of Fisheries and Ocean's *Fisheries Act*, 1985, and Environment Canada's *Environmental Protection Act*, 1999.

Consult regulatory authorities for acceptable disposal options. Options may include:

- **Option 1: Disposal into local sanitary sewers.**
  To dispose of heavily chlorinated water in the local sanitary sewer system, first get written approval from the local sewer department. Heavily chlorinated water must meet the conditions required by the local sewer department. Most wastewater treatment plants use biological treatments to treat the wastewater, which means heavily chlorinated water disposed of in sewage systems could affect water treatment. You may need to de-chlorinate the water before disposal. To do so, follow the guidelines in Option 2; and
- **Option 2: Disposal into the environment.**
  To dispose of heavily chlorinated water into the environment, de-chlorinate it first by adding the appropriate amount of a neutralizing chemical such as sulphur dioxide, sodium bisulphite, sodium sulphite or citric acid. Add a small amount of the neutralizing chemical while continually monitoring the free chlorine residual in the water. Keep adding the neutralizing chemical until the free chlorine reaches a concentration of less than 1 mg/L. Once the required concentration of chlorine has been achieved, the water can be safely disposed of. Consult Appendix C to estimate how much neutralizing chemical you may need.

8. Water Quality Testing

The cistern should be tested for bacteriological contamination at least once per year and after any cleaning or repairs.

Recommended sampling procedures are outlined in the Health Canada First Nations and Inuit Health Branch's *Procedure Manual for Safe Drinking Water in First Nations Communities South of 60°*.

9. Inventory and Record Keeping

An inventory of every drinking water cistern should be maintained and provided to the local First Nations authorities. Information normally includes:

- Name, address and Global Positioning System (GPS) coordinates of each drinking water cistern;
- Name and address of the drinking water cistern installer;
- Manufacturer of the water drinking water cistern, and year and material of construction;
- Technical specifications for the drinking water cistern and its equipment, including the drinking water cistern's size and holding volume;
- Photograph(s) of the drinking water cistern installation (optional);

- Inspection report prepared by the individual conducting the inspection during the installation of the drinking water cistern;
- Water sampling and testing results and schedule; and
- Repair and maintenance records.

Advise First Nations authorities immediately of updates or changes to the inventory data, including modifications or repairs to plumbing.

10. Emergency Inspection

Immediately advise First Nations authorities of any adverse water quality problems, such as bacterial or chemical contamination. An Environmental Health Officer should have access to the drinking water cistern so she or he may:

- Inspect the drinking water cistern and associated piping and equipment;
- Review relevant documentation, including repair and maintenance records;
- Test the drinking water to make sure it meets the GCDWQ; and
- Request additional information, as appropriate.

11. Decommissioning

A contractor authorized by the First Nations authority should properly decommission all drinking water cisterns that are no longer being used to supply drinking water.

Decommissioning may consist of either:

- Removing the drinking water cistern entirely;

  OR

- Filling the drinking water cistern with an approved uncontaminated material such as sand or gravel and leaving the cistern in the ground.

The access hatch and piping connections to a decommissioned below ground drinking water cistern should be cut and capped at least 500 mm below grade. For above ground drinking water cisterns, the cistern can be removed and disposed of in a landfill site. The inlet pipe to the house must be properly disconnected and capped.

12. Definitions

The following are definitions of some of the terms used in this guidance document.

Cam-lock Fitting
A device that connects or disconnects pipes.

Cistern collar
An opening or collar, large enough for a person to climb down and clean or repair the cistern.

Drinking water cistern
A tank used to store drinking water for domestic, commercial or industrial purposes.

Disinfection
In this context, disinfection refers to the disinfection of drinking water cisterns. It is carried out by using an agent, usually a chemical, to destroy, neutralize, or inhibit the growth of disease-carrying microorganisms. For example, sodium hypochlorite (bleach) is an acceptable disinfectant for cistern cleaning as it does not contain algaecides, scents, perfumes or other additives.

Drinking water
For the purposes of this document, water from a public drinking water supply that has been treated and, at minimum, meets the most recent edition of the *Guidelines for Canadian Drinking Water Quality*.

Drinking water hauler
A trained individual who is employed to deliver bulk quantities of water to drinking water cisterns.

First Nations authorities
Chief and Council, or any person or group of people with delegated authority to make decisions on behalf of the Chief and Council. Examples could include Health Directors, Housing Managers or Facility Operators.[2]

Heat tracing
A system to prevent pipes from freezing. The piping is insulated to avoid heat loss. Heat tracing can use electricity or fluids. Electric heat tracing converts electric energy into heat and maintains the desired temperature in the pipes. Fluid heat tracing uses fluid or steam at high temperatures to transfer heat from one pipe to another.

Hydrostatic Test
A test used to measure the strength and find leaks in a pipe or other tubular and hollow equipment.

Tanker truck
A vehicle constructed or modified to deliver drinking water.

Trucked drinking water delivery
The transportation of drinking water in a water tank from the public drinking water supply. The tank is fixed to a truck for delivering water to cisterns at one or more destinations.

Water tank
A container mounted on the tanker truck used for the delivery of the drinking water.

Stagnant water
Water that, if not used promptly and allowed to stand over a period of time, could become stale, adversely affecting its quality.

Unstable soils
Sub-surface material that, because of its nature or the influence of other conditions, does not remain in place without additional support.

2. This definition was developed by HC-FNIHB's Environmental Public Health Division.

13. References

ADI Limited. 2007. *State of Water Cisterns in Alberta First Nations Communities South of 60°.*

Agriculture and Agri-Food Canada. February 2006. *Maintaining Safe Domestic Water Quality with On-farm Cisterns and Water Tanks.*

Alaska Building Research, Research Series HCM-01557. 2002. *Water Cistern Construction for Small Houses;* Accessed on 02 March 2009 at: **http://www.uaf.edu/ces/publications-db/catalog/eeh/HCM-01557.pdf**

ANSI/AWWA D120-02. January 2003. *Standard for Thermosetting Fibreglass-reinforced Plastic Tanks.*

California Department of Health Services, Food and Drug Branch. 2007. *Procedure for Obtaining a Water Haulers License;* Accessed on 02 March 2009 at: **www.dhs.ca.gov/fdb/local/PDF/Hauler%20 Procedures%204-17-07.pdf**

CAN/CSA-B137 Series-05. 2005. *Thermoplastic pressure piping compendium.* Canadian Standards Association, Mississauga, ON.

Colorado Department of Public Health and Environment. *Guidelines for Preparing Tank Trucks for Transporting Drinking Water;* Accessed on 02 March 2009 at: **www.cdphe.state.co.us/wq/DrinkingWater/pdf/Security/Guidelines_Preparing_Tank_Trucks.pdf**

Errson, O. 2005. *Rainwater Harvesting and Purification System;* Accessed on 02 March 2009 at: **www.rwh.in/**

Health Canada Environmental and Workplace Health. 2005. *Guidance for Providing Safe Drinking Water in Areas of Federal Jurisdiction;* Accessed on 02 March 2009 at: **www.hc-sc.gc.ca/ewh-semt/pubs/water-eau/guidance-federal-conseils/index-eng.php**

Health Canada, First Nations and Inuit Health Branch. 2002. *Procedure Manual for Safe Drinking Water in First Nations Communities South of 60°;* Accessed on 02 March 2009 at: **www.watertraining.ca/drinkingwater/pdf/DW_English.pdf**

Health Canada, First Nations and Inuit Health Branch. 2008. *Draft Guidelines for the Design, Installation, Maintenance and Decommissioning of Water Cisterns in First Nations Communities South of 60°.*

Health Canada, First Nations and Inuit Health Branch. 2008. *Draft Interim Standards for Water Trucks in First Nations Communities.*

Interdepartmental Water Quality Training Board (IWQTB). 2009. *Drinking Water Storage Tanks.*

Maritime Safety Forum. 2006. *Guidelines for the Carriage of Potable Water for Supply to Off-shore Locations;* Accessed on 02 March 2009 at: **www.marinesafetyforum.co.uk/upload-files//guidelines/pot_water_guidelines_issue1_april06.pdf**

Mintz, E., Reiff, F., Tauxe, R. 1995. *Safe Water Treatment and Storage in the Home: a Practical New Strategy to Prevent Waterborne Disease;* Accessed on 02 March 2009 at: **www.cdc.gov/safewater/publications_pages/1995/mintz_1995.pdf**

Missouri Department of Health and Senior Services. 2008. *Guidelines for Hauling Bulk Drinking Water for Emergency Distribution;* Accessed on 02 March 2009 at: **www.dhss.mo.gov/BT_Response/Nat_Disaster/BulkDrinkingWater.pdf**

Montana Department of Environmental Quality (MDEQ). 2000. *Domestic Cistern Disinfection;* Accessed on 02 March 2009 at: **www.deq.mt.gov/wqinfo/swp/Guidance/102_Disin.htm**

Montana Department of Environmental Quality (MDEQ). 2002. *Montana Standards for Cisterns (Water Storage Tanks) for Individual Non-public Systems;* Accessed on 02 March 2009 at: **www.deq.state.mt.us/wqinfo/Circulars/Circular17.pdf**

Nath, K., S. Bloomfield, and M. Jones, International Science Forum. 2006. *Household Water Storage, Handling and Point of Use Treatment;* Accessed on 02 March 2009 at: **www.ifh-homehygiene.org/IntegratedCRD.nsf/eb85eb9d8ecd365280257545005e8966 /AA885658EC1F19EE8025752200559653/$File/low_res_water_paper.pdf**

New Mexico Environment Department Drinking Water Bureau. 2007. *Application for Drinking Water Hauling Operations in New Mexico;* Accessed on 02 Mar 2009 at: **www.nmenv.state.nm.us/dwb/forms/documents/WaterHaulingApplication2.pdf**

Nova Scotia Environment and Labour (NSEL). 2005. *Potable Water Hauler Guidelines.* **http://0-fs01.cito.gov.ns.ca.legcat.gov.ns.ca/deposit/b10566405.pdf**

NSF/ANSI. *Standard 61. Drinking Water System Components—Health Effects.* **http://standards.nsf.org/**

Ontario Centre for Municipal Best Practices. 2008. *Best Practice Summary Report Bulk Water Strategy;* Accessed on 02 March 2009 at: **www.omkn.ca/AM/Template.cfm?Section=Water_Wastewater_Energy_Management&Template=/CM/ContentDisplay.cfm&ContentID=151019**

Ontario Ministry of Health and Long-term Care, Public Health Division. 2003. *Drinking Water Haulage Guidelines.*

Oregon Health Services—Drinking Water Program. 2008. *Drinking Water Hauling Guidelines;* Accessed on 02 Mar 2009 at: **www.oregon.gov/DHS/ph/dwp/docs/haulguide.pdf**

Swain, H., S. Louttit, and S. Hrudey, Minister of Indian Affairs and Northern Development and Federal Interlocutor for Métis and Non-status Indians. 2006. *Report of the Expert Panel on Safe Drinking Water for First Nations;* Accessed on 02 March 2009 at: **www.sdw-eps.gc.ca/rsrsc/volume_1_e.pdf**

Taracha, K., Health Canada, First Nations and Inuit Health Branch. 2006. *Report on Public Health Risks in Drinking Water Supplies in Four First Nations Communities in Saskatchewan.*

Taracha, K., Health Canada, First Nations and Inuit Health Branch. 2007. *Report on Observations of Drinking Water Supplies and Wastewater Disposal in Three First Nations Communities in Manitoba.*

Taracha, K, Health Canada, First Nations and Inuit Health Branch. 2007. *Summary Report: Cisterns in First Nations Communities South of 60°.*

Utah Department of Environmental Quality, Division of Drinking Water, *Recommended Procedures for Hauling Drinking Water;* Accessed on 02 Mar 2009 at: **www.swuhealth.org/forms/eh/hauling_water_app.pdf**

West Virginia Department of Health and Human Resources. 1989. *Manual of Environmental Health Procedures;* Accessed on 02 Mar 2009 at: **www.wvdhhr.org/phs/manual/Drinking_Water/DW-27%20Requirements%20for%20Potable%20Water%20Haulers.pdf**

World Health Organization. 2006. *Guidelines for Drinking-water Quality;* Accessed on 02 March 2009 at: **www.who.int/water_sanitation_health/dwq/gdwq0506.pdf**

APPENDIX A

Sample Drinking Water Cistern Maintenance Record Form

Cistern Owner	Address	Phone Number

Date	Time	Inspection	Cleaning	Disinfection	Comments	Signature

Appendix B

Sample Drinking Water Cistern Chlorine Residual/Bacteriological Record Form

(Suggested sampling frequency—once every three months)

Cistern Owner	Address	Phone Number

Date	Time	Sample Point	Water Hauler	Free Chlorine Residual (min 0.2 mg/L)	Bacteriological Lab Results Reference #	Comments	Tester/Sampler Signature

APPENDIX C

Sample Calculations for Amount of Chemicals Required to Neutralize Various Residual Chlorine Concentrations

The following table is used to estimate the volume of neutralizing chemical required to be added to heavily chlorinated water prior to disposal:

Table 1
Amounts of chemicals required to neutralize various residual chlorine concentrations in 100,000 Igal* (454.6 m^3) of water

Starting Residual Chlorine Concentration	Chemical Required**							
	Sulphur Dioxide (SO_2)		Sodium Bisulphite ($NaHSO_3$)		Sodium Sulphite (Na_2SO_3)		Sodium Thiosulfate ($Na_2S_2O_3 \cdot 5H_2O$)	
mg/L	lb	kg	lb	kg	lb	kg	lb	kg
1	0.8	0.4	1.2	0.5	1.4	0.6	1.2	.54
2	1.7	0.8	2.5	1.1	2.9	1.3	2.4	1.1
10	8.3	3.8	12.5	5.7	14.6	6.6	12.0	5.4
50	41.7	18.9	62.6	28.7	73.0	33.1	60.0	27.2

* Concentrations are provided in Imperial Gallons (Igal), as this is the most common unit in Canada.
If US gallons are required, a conversion factor of 1 Imperial gallon = 1.2 US gallon should be used to convert units to US gallons.

** The chemicals listed in this table are alternatives; only one chemical is required to neutralize residual chlorine concentrations, not all four.
Amounts have been rounded off to the nearest decimal place.

Source: Adapted from ANSI/AWWA Standard C652-02: Disinfection of Water-storage Facilities, by permission. Copyright © 2002, American Water Works Association

For cistern volume of x, a conversion factor can be used to convert values in Table 1 as follows:

$$\text{Conversion Factor (CF)} = \frac{x}{100{,}000 \text{ Igal}}$$

Multiply chemical dosages included in Table 1 by the CF above.

For example, if the volume of cistern is 1,000 Igal, the following conversion factor is used:

$$CF = \frac{1{,}000 \text{ Igal}}{100{,}000 \text{ Igal}} = 0.01$$

The amount of Sulphur Dioxide (SO_2) to be added is:

In lb = 0.8 x 0.01 = 0.008 lb
In kg = 0.36 x 0.01 = 0.0036 kg

Using this CF for all values in Table 1, the table below can be produced for a cistern volume of 1,000 Igal:

Table 2
Amounts of chemicals required to neutralize various residual chlorine concentrations in 1,000 Igal* (4.546 m³) of water

Starting Residual Chlorine Concentration	Chemical Required**							
	Sulphur Dioxide (SO_2)		Sodium Bisulphite ($NaHSO_3$)		Sodium Sulphite (Na_2SO_3)		Sodium Thiosulfate ($Na_2S_2O_3 \cdot 5H_2O$)	
mg/L	lb	kg	lb	kg	lb	kg	lb	kg
1	0.01	0.004	0.01	0.005	0.01	0.006	0.01	0.005
2	0.02	0.008	0.03	0.01	0.03	0.01	0.02	0.01
10	0.08	0.04	0.13	0.06	0.15	0.07	0.12	0.05
50	0.42	0.19	0.63	0.29	0.73	0.33	0.6	0.27

* Concentrations are provided in Imperial Gallons (Igal), as this is the most common unit in Canada.
If US gallons are required, a conversion factor of 1 Imperial gallon = 1.2 US gallon should be used to convert units to US gallons.

** The chemicals listed in this table are alternatives; only one chemical is required to neutralize residual chlorine concentrations, not all four.
Amounts are provided to 2 or 3 decimal places, as appropriate.

APPENDIX D

Checklist for Inspecting Drinking Water Cisterns

(Optional—For Reference Only)

1. Outer Shell: Visual Inspection

GENERAL—*Does the cistern have any of the following on or around the outer surface* (as applicable):	
Cracks, deformations, and/or flakes	YES □ NO □
Corrosion	YES □ NO □
Weathering	YES □ NO □
Signs of wear	YES □ NO □
Signs of rusting or iron/manganese residue build-up	YES □ NO □
Signs of leakage	YES □ NO □
Points of entry for rodents, insects, rainwater (if applicable), etc.	YES □ NO □
Shearing on inlet/outlet connections	YES □ NO □
Damages on the fixtures leading to the piping system	YES □ NO □
OPENINGS—*Does the cistern have means of…*	
Being secured to prevent unauthorized entry	YES □ NO □
Preventing access by vermin	YES □ NO □
Preventing entry of foreign materials and substances	YES □ NO □
Protection from freezing	YES □ NO □
NUMBER OF OPENINGS—*Does the drinking water cistern have the following:*	
An access opening for maintenance	YES □ NO □
A vent opening	YES □ NO □
An opening for filling	YES □ NO □
An overflow opening	YES □ NO □
An opening for draining (above ground cisterns)	YES □ NO □
An overflow opening (above ground cisterns)	YES □ NO □
DRAINAGE—*Does the drinking water cistern have the following:*	
A means to drain or be pumped out completely	YES □ NO □

2. Inner Shell

GENERAL—*Does the cistern have the following:*	
Smooth surface	YES □ NO □
Liner or coating	YES □ NO □
Light penetration (lux meter or alternative test, if available)	YES □ NO □
Complete drainage	YES □ NO □
Stagnant spots	YES □ NO □
Indicators for maximum and minimum levels of water with alarms	YES □ NO □
Signs of rusting or iron/manganese residue build-up	YES □ NO □

3. Markings, Warnings and Information

DATA PLATES—*Does the drinking water cistern have data plates with the following information:*	
Intended use	YES □ NO □
Capacity	YES □ NO □
Cistern construction material	YES □ NO □
Date of manufacture	YES □ NO □
Climatic conditions of operation	YES □ NO □
CSA Standard designation	YES □ NO □
Maximum burial depth (in metres)	YES □ NO □
Liquid depth (if less than 1200 mm, expressed in mm)	YES □ NO □
MARKINGS—*Does the drinking water cistern have markings indicating:*	
Whether the cistern is suitable for sulphate or non-sulphate soils (for concrete cisterns only)	YES □ NO □
Intended installation	YES □ NO □
A visible data plate	YES □ NO □
A legible data plate	YES □ NO □
Is it permanently fixed?	YES □ NO □
WARNINGS—*Does the drinking water cistern include the following warnings:*	
“DANGER—CONFINED SPACE”	YES □ NO □
Are the warnings in both French and English?	YES □ NO □
INFORMATION—*Does the drinking water cistern come with the following information:*	
An operation and maintenance manual	YES □ NO □
Recordings of prior testing	YES □ NO □
Drawings of installations	YES □ NO □

4. Surrounding Area

SET-BACK DISTANCES—*Does the drinking water cistern have the following set-back distances from its surroundings:*	
1.0 m from property lines	YES □ NO □
1.5 m from footing drains or foundation walls	YES □ NO □
15 m from any source of contamination	YES □ NO □

5. Above Ground Installations

GENERAL—*For drinking water cisterns installed above ground, is the drinking water cistern:*	
Weatherproofed	YES □ NO □
Insulated	YES □ NO □
Protected against sunlight radiation and heating	YES □ NO □
Outfitted with hold-down and support systems	YES □ NO □
Outfitted with supports and restraints	YES □ NO □
Protected against impacts from vehicles	YES □ NO □
Accessible for cleaning	YES □ NO □

6. Other Checks

PUMP—*Is the drinking water cistern's pump:*	
In compliance with CAN/CSA Standard C22.2 (108)	YES □ NO □
Adequately sized for its intended use	YES □ NO □
A suitable type for its intended use	YES □ NO □
BACKFLOW—*Does the drinking water cistern have the following:*	
Backflow protection to prevent connections between potable water systems and non-potable water systems	YES □ NO □
SURFACE SLOPE	
Is the surrounding surface sloped so the water drains away from the cistern?	YES □ NO □

7. Hydrological Check

DOCUMENTATION	
Hydrological check completed?	YES □ NO □
If yes, was it satisfactory?	YES □ NO □
LOW-PRESSURE AIR TEST	
Has a low-pressure air test been performed?	YES □ NO □
If yes, was it satisfactory?	YES □ NO □
INFILTRATION TEST USING WATER	
Was documentation on water infiltration provided?	YES □ NO □
If yes, was it satisfactory?	YES □ NO □
EXFILTRATION TEST USING WATER—*(for dry areas only)*	
Documentation on water exfiltration provided (if applicable)?	YES □ NO □
If yes, was it satisfactory?	YES □ NO □